AER 222 – Graphic Design

Term Test CATIA Skills– Winter 2016

Section 4

90%

Time Allowed – 120 mins

Instructions:

1. You are not allow to use lab manual.
2. At any moment no data storage media is allowed to connect to the computer.
3. Return instruction sheet.
4. Submit your file through D2L Dropbox. Use your name (full name) as file name. ("Assignment"->"Dropbox"->" CATIA test")

Name_____

File name_____
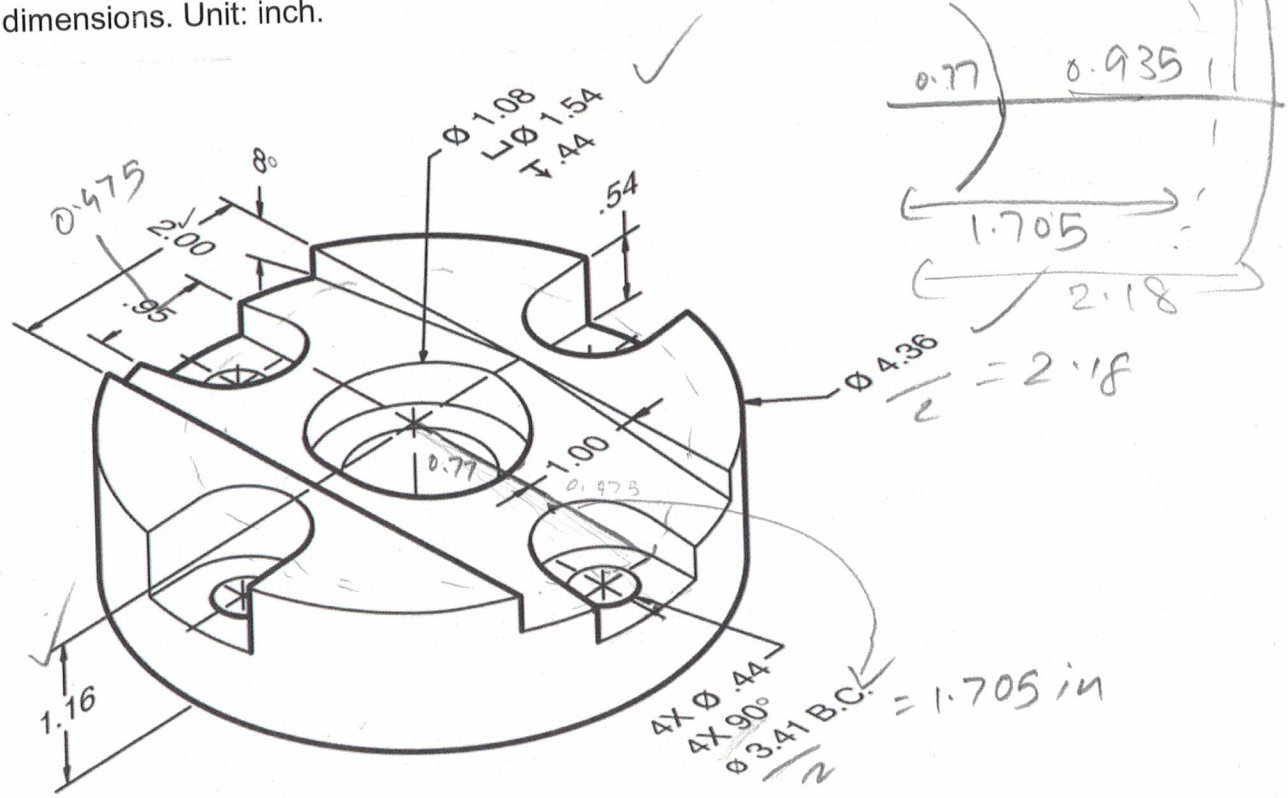
Generate the following 3D solid model and create a section view. DOT NOT add dimensions. Unit: inch.